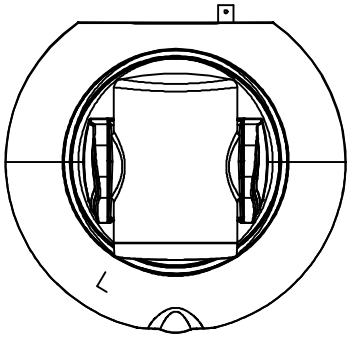

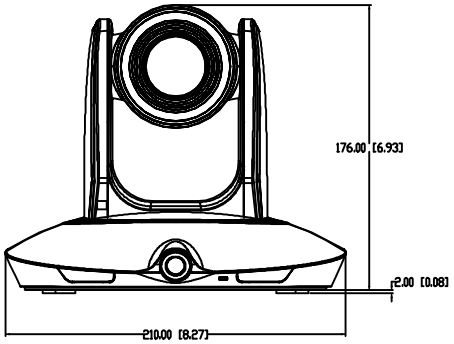

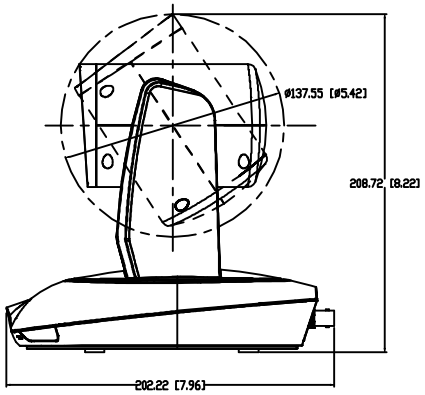

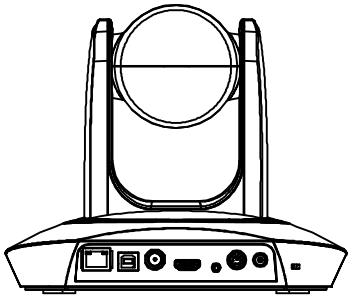

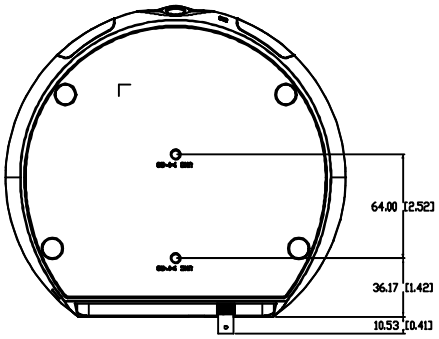

機密 (Confidentiality)