www.aver.com

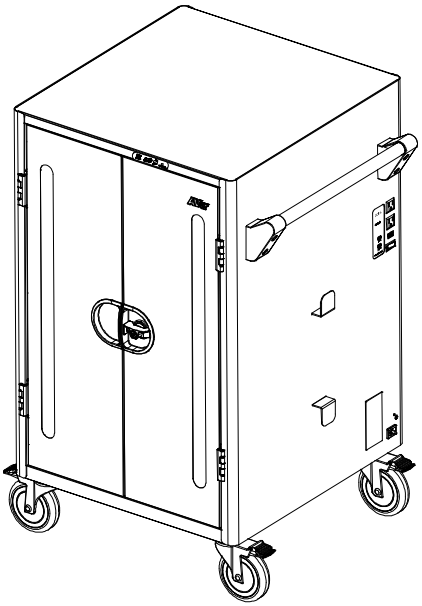

X18iS

User Manual

Product is to marked to read the instructions before use or with the symbol.

WARNING

AVERTISSEMENT

ALWAYS FOLLOW SAFETY PRECAUTIONS

RESPECTEZ TOUJOURS LES CONSIGNES DE SÉCURITÉ

IMPORTANT SAFEGUARDS

- Death or serious injury may occur when children climb on audio and/or video equipment furniture. A remote control or toys placed on the furnishing may encourage a child to climb on the furnishing and as a result the furnishing may tip over on to the child.
- Relocating audio and/or video equipment to furniture not specifically designed to support audio and/or video equipment may result in death or serious injury due to the furnishing collapsing or over turning onto a child.
- UV-C light hazard – avoid exposure to eyes/skin.

- Il y a un danger de blessures graves ou même de mort si un enfant grimpe sur un meuble pour matériels audio ou vidéo. Une télécommande ou un jouet laissés sur le meuble peuvent inciter l'enfant à y grimper, ce qui peut provoquer le basculement du meuble sur l'enfant.
- Le repositionnement de matériels audio ou vidéo sur un meuble non spécialement conçu pour cela peut causer la mort ou des blessures graves par effondrement ou renversement du meuble sur un enfant.
- Risque de lumière UV-C - éviter toute exposition aux yeux / à la peau.

UV-C Light Hazard

- **When cart is in use, there is UV-C light inside.**
- **Eye and skin hazard — avoid exposure to eyes/skin.**
- Do not look directly at U V-C light. Take precautions to protect eyes and skin from direct exposure.

ONLY ADULTS should move the cart.

Le chariot ne doit être déplacé QUE PAR DES ADULTES.

NEVER climb, sit or stand on the cart.

Personne ne doit s'asseoir, se tenir ou grimper sur le chariot.

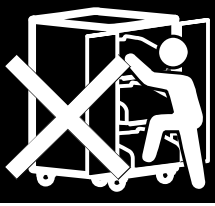

Only use the cart INDOORS to reduce risk of electric shock.

N'utilisez le chariot qu'à L'INTÉRIEUR pour réduire le risque de décharge électrique.

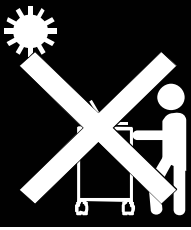

⚠ CAUTION

This cart is intended for use only with loading as indicated. Use with loads greater than indicated may result in instability causing possible injury.

⚠ MISE EN GARDE

Ce chariot est conçu pour n'être utilisé qu'avec des charges telles qu'indiquées. L'utilisation avec des charges supérieures aux indiquées peut rendre le chariot instable et causer des blessures.

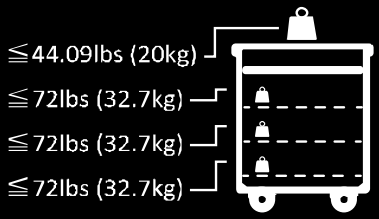

CAUTION!

- **DO NOT** allow anyone to sit, stand, or climb on the cart.
- **DO NOT** lift the cart.
- **DO NOT** block the ventilation holes used for air circulation.
- **DO NOT** overload objects on the cart shelves. (Work platform maximum loading = 20kg / 44.09lbs; each shelf maximum loading = 32.7kg / 72lbs).
- **DO NOT** put any devices that exceed the maximum loading weight on top of cart.
- **DO NOT** open the doors when disinfecting.
- Before disinfecting, please make sure the doors are closed. We strongly recommend you to lock the doors.
- When moving the cart, **DO NOT** put any devices (e.g. TV, Monitor, Documents camera, etc.) on top of the cart.
- **DO NOT** use any TV/monitor/display on top of the cart.
- Before moving the cart, disconnect the power from the wall outlet.
- While moving the cart, make sure the power cord is tightly wrapped and secured.

ATTENTION!

- **PERSONNE** ne doit s'asseoir, se tenir ou grimper sur le chariot.
- **IL NE FAUT PAS** soulever le chariot.
- **IL NE FAUT PAS** obstruer les orifices de ventilation qui permettent à l'air de circuler.
- **IL NE FAUT PAS** surcharger d'objets les étagères du chariot (charge maximale de la plateforme de travail : 20kg / 44,09lbs ; charge maximale de chaque étagère : 32,7kg / 72lbs).
- **NE** placez **AUCUN** appareil dépassant le poids de chargement maximum sur le dessus du chariot.
- **N'ouvrez PAS** les portes lors de la désinfection.
- Avant de commencer la désinfection, veuillez vous assurer que les portes sont fermées. Nous vous recommandons fortement de verrouiller les portes.
- Pour déplacer le chariot, **IL NE FAUT** poser aucun appareil (poste de TV, moniteur, caméra pour documents, etc.) sur le haut dudit chariot.
- **N'UTILISEZ AUCUN** téléviseur / moniteur / écran sur le dessus du chariot.
- Avant de déplacer le chariot, débranchez la prise secteur.
- Pendant le déplacement du chariot, veillez à ce que le cordon d'alimentation soit correctement replié et fixé.

SAVE THESE INSTRUCTIONS

FCC NOTICE (Class A)

NOTE: This equipment has been tested and found to comply with the limits for a Class A digital device, pursuant to part 15 of the FCC Rules. These limits are designed to provide reasonable protection against harmful interference when the equipment is operated in a commercial environment. This equipment generates, uses, and can radiate radiofrequency energy and, if not installed and used in accordance with the instruction manual, may cause harmful interference to radio communications. Operation of this equipment in a residential area is likely to cause harmful interference in which case the user will be required to correct the interference at his own expense.

FCC Caution: Any changes or modifications not expressly approved by the party responsible for compliance could void the user's authority to operate this equipment.

This device complies with part 15 of the FCC Rules.
Operation is subject to the following two conditions:
(1) This device may not cause harmful interference, and
(2) this device must accept any interference received, including interference that may cause undesired operation.

DISCLAIMER

No warranty or representation, either expressed or implied, is made with respect to the contents of this documentation, its quality, performance, merchantability, or fitness for a particular purpose. Information presented in this documentation has been carefully checked for reliability; however, no responsibility is assumed for inaccuracies. The information contained in this documentation is subject to change without notice.
In no event will AVer Information Inc. be liable for direct, indirect, special, incidental, or consequential damages arising out of the use or inability to use this product or documentation, even if advised of the possibility of such damages.

TRADEMARKS

“AVer” is a trademark owned by AVer Information Inc. Other trademarks used herein for description purpose only belong to each of their companies.

COPYRIGHT

©2021 AVer Information Inc. All rights reserved.
All rights of this object belong to AVer Information Inc. Reproduced or transmitted in any form or by any means without the prior written permission of AVer Information Inc. is prohibited. All information or specifications are subject to change without prior notice.

The mark of Crossed-out wheeled bin indicates that this product must not be disposed of with your other household waste. Instead, you need to dispose of the waste equipment by handing it over to a designated collection point for the recycling of waste electrical and electronic equipment. For more information about where to drop off your waste equipment for recycling, please contact your household waste disposal service or the shop where you purchased the product.

Contact Information

USA
AVer Information Inc.
https://www.averusa.com
668 Mission Ct.,
Fremont, CA 94539
Tel: +1 (408) 263 3828
Toll-free: +1 (877) 528 7824
Technical support: support.usa@aver.com

Contents

Package Contents 1
Dimensions 1
Diagram 2
Secure the Cart 3
Door Lock 3
UV Lamp Installation 5
Cable Management 6
Charging Cart 8
Adaptive Intelligent Charging System 9
UV Lamp Panel Setup 10
LED Indicators 11
Troubleshooting 12
Specifications 13
Service and Warranty 14
Appendix – Earthing 15

Package Contents

The following items are included in the package. Please check if each item is available before using.

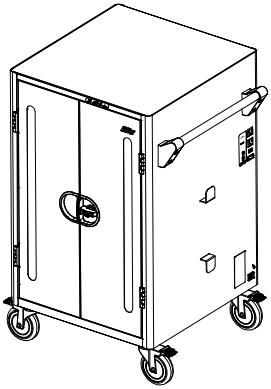

X18iS Cart

User Manual

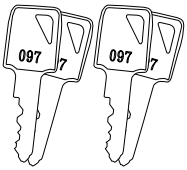

Door Key x4

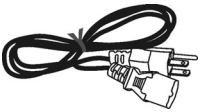

Power Cable

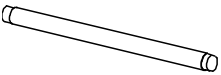

UV Lamp x6

Dimensions

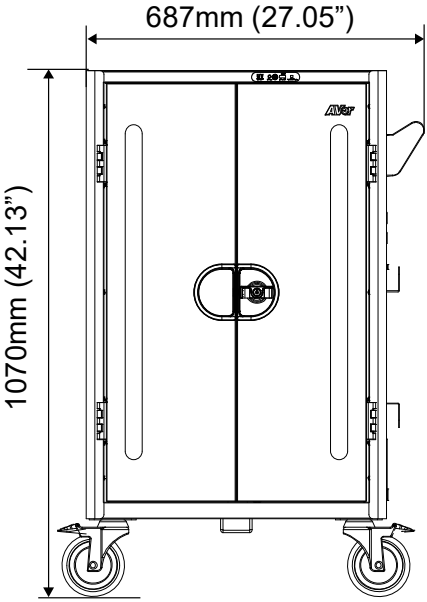

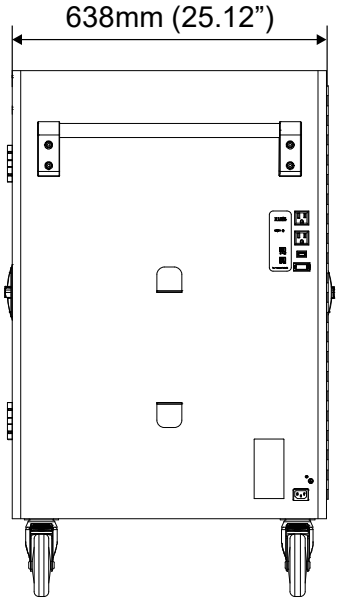

Diagram

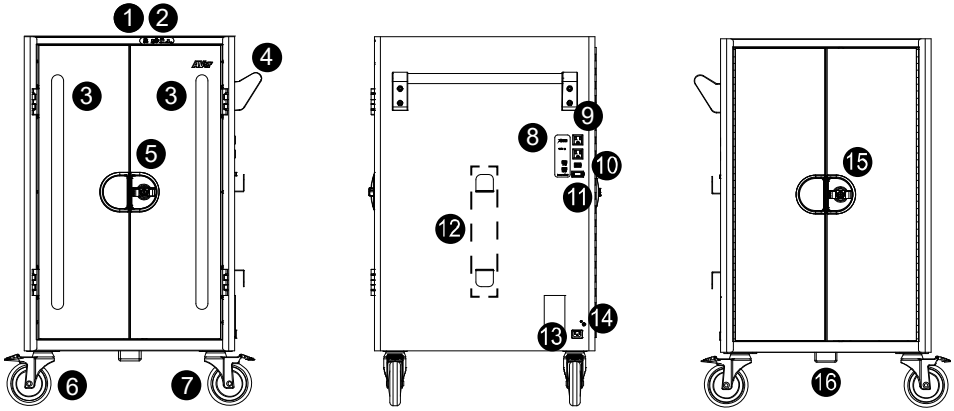

Front	Side	Back
1. Work platform 2. UV lamp panel 3. Observation windows 4. Handle 5. Door lock 6. 5” direction lockable caster 7. 5” lockable caster	8. LED indicators 9. Auxiliary outlets 10. USB firmware upgrade port (not for charging or storage) 11. Power switch 12. Power cable wrap brackets 13. Power inlet 14. Earthing screw	15. Door lock 16. Security hook

Secure the Cart

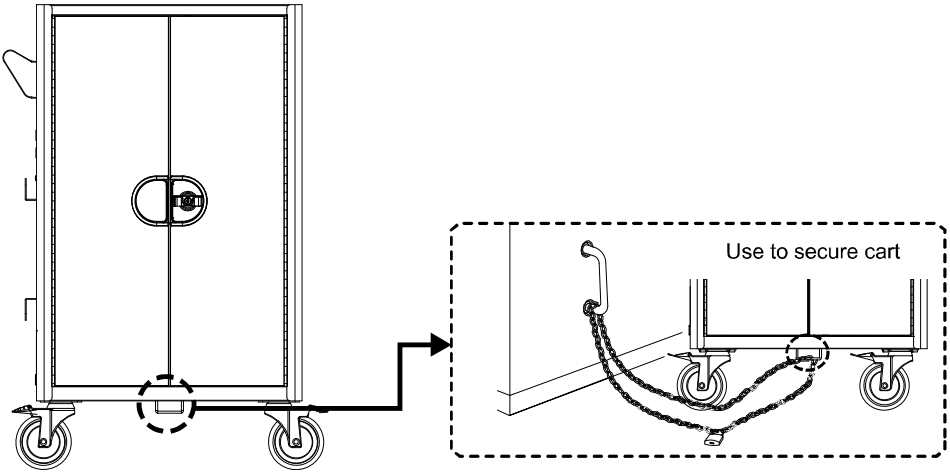

Door Lock

- Unlock the door

1 Use key to unlock the door.

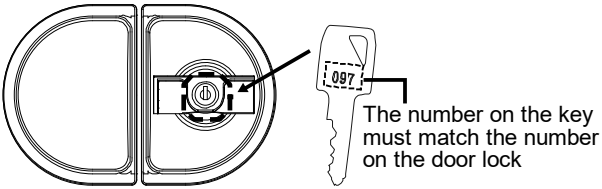

2 Turn the door lock to vertical position to open the door.

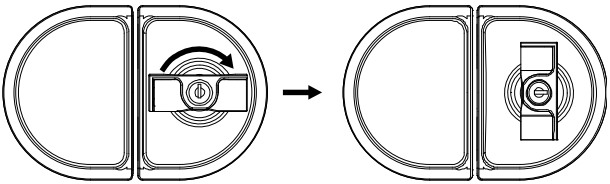

- Lock the door

To lock the door, close the door and turn the door lock back to horizontal position.

Then, use the key to lock the door.

For more security, use padlock to double secure the door.

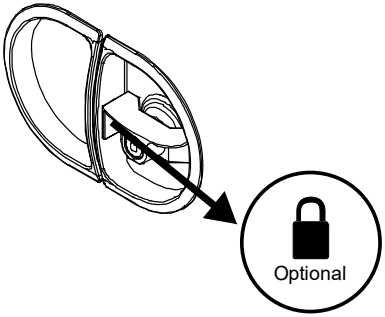

[Note] The shackle dimension of front and back doors are limited to Ø8mm (0.31”).

UV Lamp Installation

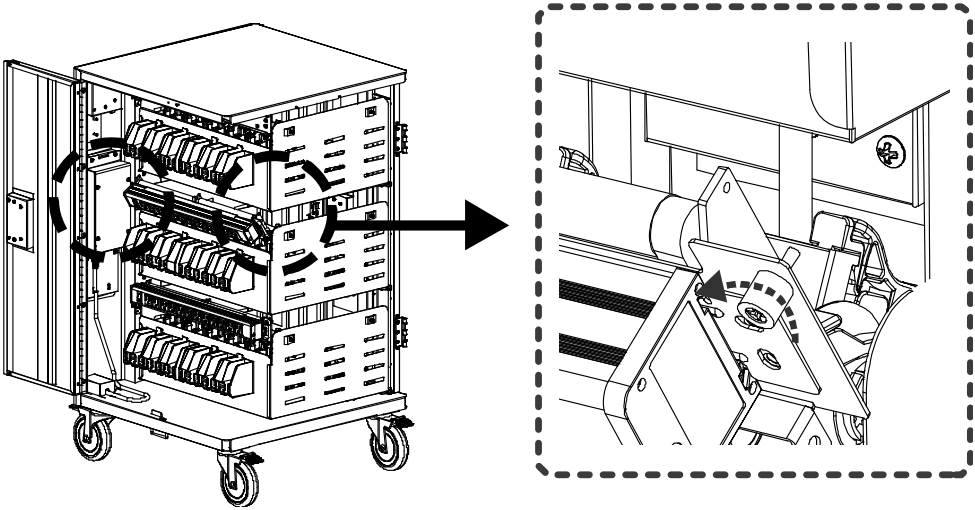

1. Set the power switch to the OFF position. Unplug the power cord.
2. Open the rear door and find the lamp holders above the drawer.
3. Find the UV lamps in the package.
4. Loosen screws of both sides of lamp holders and rotate the lamp holders down 90°.
5. Install the UV lamps on lamp holders and rotate the UV lamps 90° until you hear a click sound.
6. Push the lamp holders back and tighten the screws.
7. Plug the power cord. Set the power switch to the ON position.

[Warning]

- Before disinfecting, please make sure the doors are closed. We strongly recommend you to lock the doors.
- DO NOT open the doors during disinfecting.

Cable Management

Back

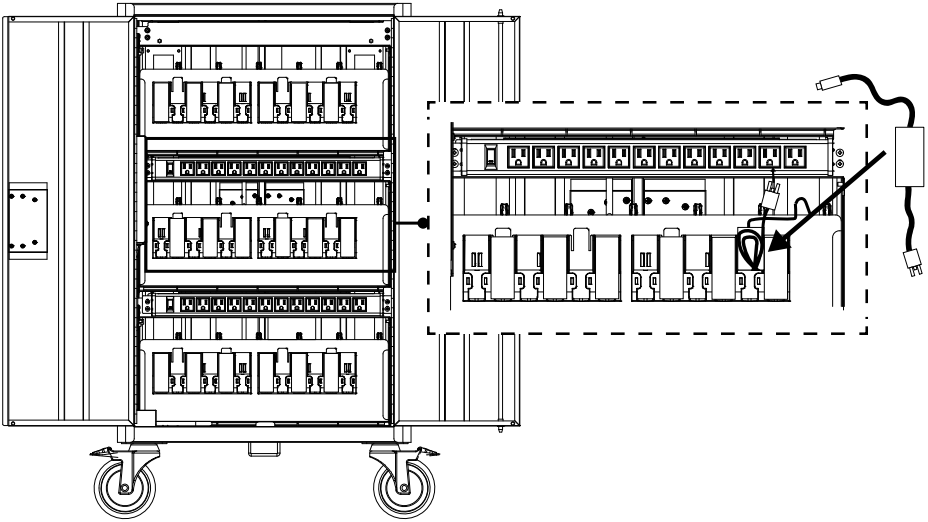

1. Open the rear door.
2. Bundle the DC power cord with cable tie or zip-tie (not supplied) and leave proper length for connecting to the device.
3. For the ventilation purpose, EPEs are purposed placed alternately. Do not remove the EPEs. Place the power adapter into the rest individual adapter compartment.
4. Pass the DC-end of the adapter cable to the front of the cart through the space provided.
5. Plug-in the AC-end power cord to the corresponding power AC socket.

[Notes]

- It is recommended to use cable ties (not supplied) to secure and manage cables.
- It is recommended to allocate 2 persons for efficient device cabling.

Front

1. Open the front doors.

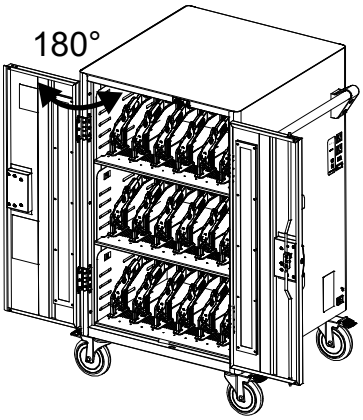

2. Release the cable clamp by pulling locking feature (A).
3. Route the adaptor DC-end cable along with the V-shape routing groove.

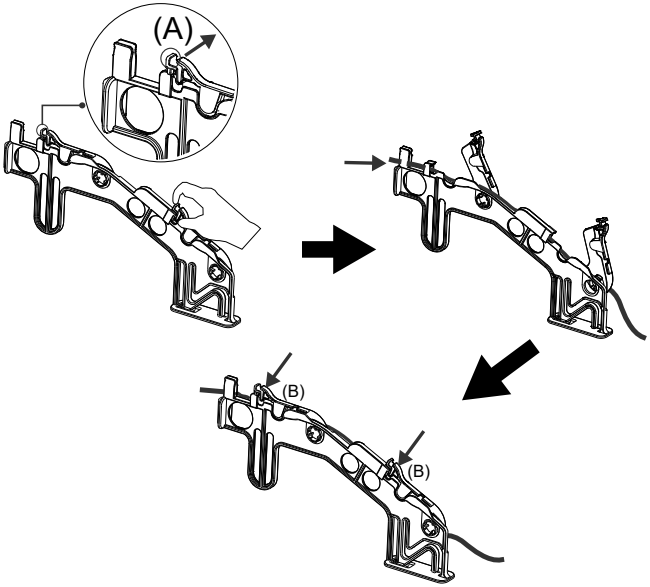

4. Snap the locking piece (B) to firmly secure the DC-end cable.
5. Place the mobile device into the bay.
6. Plug in the DC-connector to the mobile device.

Charging Cart

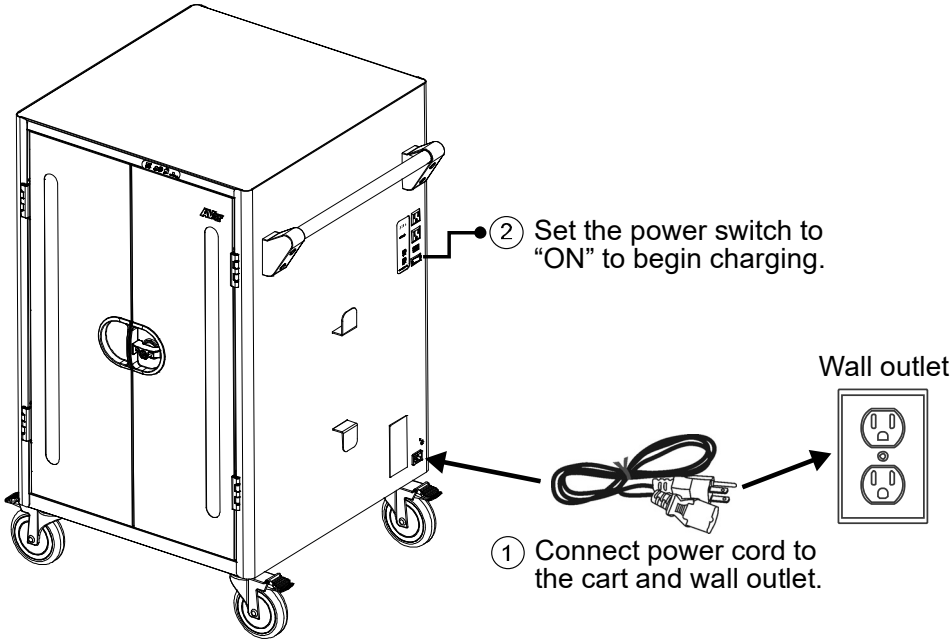

[Notes]

- Set the power switch to the **OFF** position before plugging the cart to wall outlet.
- Auxiliary outlet and power inlet type may vary as they are country dependent.

Adaptive Intelligent Charging System

18 bays for X18iS are divided into 2 zones (12 bays for each zone). It is recommended to plug the top bays into the top zone.

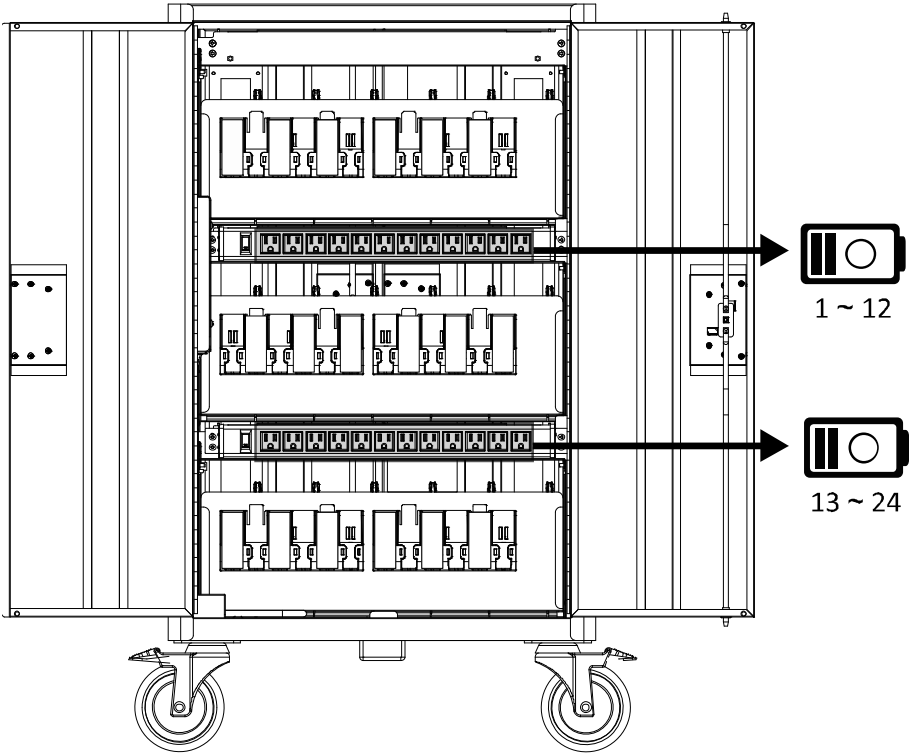

UV Lamp Panel Setup

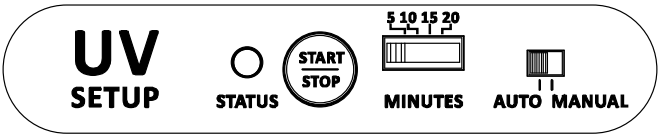

1. Select the **Auto/Manual Mode Slide Switch** to start disinfecting automatically or manually.
   a. If **Auto** mode is chosen, close the front and rear doors and disinfecting will start in 30 seconds.
   b. If **Manual** mode is chosen, close the front and rear doors and press **Start/Stop Button** to begin disinfecting. Press **Start/Stop Button** to stop disinfecting.
   c. Auto/Manual modes can be reselected even during disinfecting. The UV lamps will turn off and reset as the new selected mode.

   [Note] Four sensors are installed at front and rear doors. If the front or rear doors are open during disinfecting, the UV lamps will automatically turn off to protect the user's eyes/skin.
2. **UV Setup LED Status**

Status	Description
Solid Green	Front doors and rear doors are closed. Ready for disinfecting.
Solid Blue	**Manual mode:** Press Start/Stop Button to begin disinfecting. **Automatic mode:** Disinfecting will start in 30 seconds.
Solid/Flashing Orange	Ensure doors are properly closed.
Solid/Flashing Red	System error. Please contact AVer's technical support team: support.usa@aver.com

3. Use the **Time Slide Switch** to select the disinfecting duration: 5, 10, 15 or 20 minutes.

   [Note] The sanitizing duration can be reselected even when the UV lamps are on. The UV lamps will turn off and reset as the new selected duration.

LED Indicators

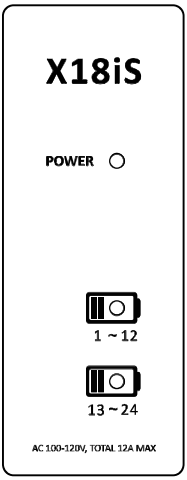

LED	Status
Power x1	▪ **Solid Green:** ON ▪ **Flashing Green / Orange / Red:** Abnormal situation (please check below table for details)
Device Status x2	▪ **All Off:** Power draw is less than 1A or all devices are fully charged ▪ **Off:** No Charging ▪ **Solid Blue:** Charging

LED	Status	Description
Power	**Flashing Green and Orange:** Power Overload (AUX is turned off and charging is still available)	**Situation:** The total power draw of auxiliary outlet and charging zone caused power overloaded. **Solution:** Power off, remove anything connected to auxiliary outlets and power back on.
	Flashing Orange: Power Overload	**Situation:** Power draw of auxiliary outlet or one of charging zone caused power overloaded. **Solution:** Check whether there is any high power device such as heater, etc., connected to auxiliary outlet or charging zone.
	Solid Orange: Short Protection	**Solution:** Please check devices which connected to auxiliary outlet and charging zone for it might have problems.
	Flashing Red: Abnormal Failure	**Solution:** Contact Technical Support (support.usa@aver.com)

Troubleshooting

Q: Why are all of my devices plugged in but not charging?

A: 1. Make sure power cords are undamaged.

2. Make sure power cords are firmly inserted into the available socket with stable current.
3. Make sure the power plug and current consumption are compliant with your country specification standards.
4. Make sure the cart is plugged into a dedicated wall outlet (not shared with other electronics such as a printer)
5. Make sure the main power switch of the cart as well as the individual power switches on each power strip are set to the ON or RESET position.
6. Remove any electronics plugged into auxiliary and power cycle the cart.

Q: My cart's main power cord or cart components are damaged. Are they covered under warranty?

A: It will be covered if within warranty period and our warranty policy is 10 year warranty on the cart and 5 years warranty on the electrical components. UV lamps are not included in warranty program.

Q: How do I know if my devices will exceed more than the allotted current?

A: Have a qualified electrician verify the current consumption of your devices. Perform the test with devices installed and batteries discharged.

Q: When I plug in the device it trips the circuit breaker. What is wrong?

A: You may have other equipment or appliances sharing the same circuit that is causing a circuit overload. Have a qualified electrician check that adequate power is available in the circuit.

Q: How to change the UV lamps when they are broken?

A: You may refer to UV Lamp Installation in this manual or scan the QR code label inside the front door to link to the installation video.

Specifications

Model	X18iS
Capacity	18 (three shelves, 6 bays per shelf)
Supported Devices	Mobile devices up to 15"
AUX Outlets	2
LEDs Status Indicators	Power LED: Red/Green Status LED (x2): Solid Blue: Charging
Charging Type	AC Adaptive Intelligent Charging
Power Specification	AC IN: 100-120V ~ 50/60Hz, 12A Power Strip: 100-120V ~ 50/60Hz, 12A Outlet: 100-120V ~ 50/60Hz, 12A
Security	Front Doors/Rear Doors: 3-point locking mechanism with key/padlock combo **[Note]** Padlock is not included in the package.
Casters	Four 5” casters ➢ Two are lockable. ➢ Two are direction lockable.
Intelligent Charging	Yes
Work Platform Loading	20kg (44.09lbs.)
Shelf Loading (ea.)	32.7kg (72lbs.)
Adapter Shelves Loading (ea.)	3kg (6.6lbs.)
Working Temperature	0°C ~30°C
Working RH%	10%~90%
Storage Temperature	-40°C~60°C
Storage RH%	5%~95%
Warranty	10 years: cart and tray 5 years: electrical components UV lamps are not included in warranty program.
Cart Dimensions (W x D x H)	687 x 638 x 1070mm (27.05” x 25.12” x 42.13”)

[Note] Specifications are subject to change without prior notice.

Model	X18iS
Slot Dimensions (W x D x H)	75 x 400 x 267mm (2.95” x 15.75” x 10.51”)
Weight without Devices	66.3kg (146.17lbs.) ± 2kg (4.41lbs)

[Note] Specifications are subject to change without prior notice.

Service and Warranty

All of our products come with a quality and safety assurance.
For customers located in North America, please visit the AVer USA support site for comprehensive RMA, Warranty, and Service information:
https://www.averusa.com/classroom-technology/support/

Appendix – Earthing

[Caution]

High touch current, Connect to earth before connecting to supply.
(Yellow/Green wire min. 14AWG)

[Note]

Installation of the protective earthing connection of the socket-outlet by a skilled person.

[Attention]

Contact à courant élevé,
Reliez l'appareil à la terre avant de la connexion à l'alimentation en courant.
(Câble jaune/vert min. 14AWG)

[Remarque]
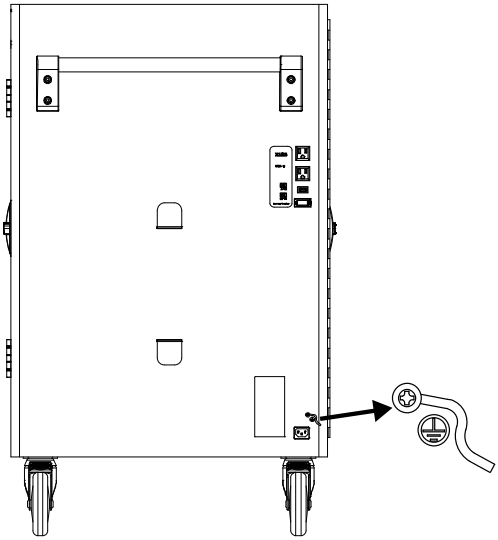
L'installation du branchement de mise à la terre sécurisée d'une prise de courant par un professionnel qualifié.